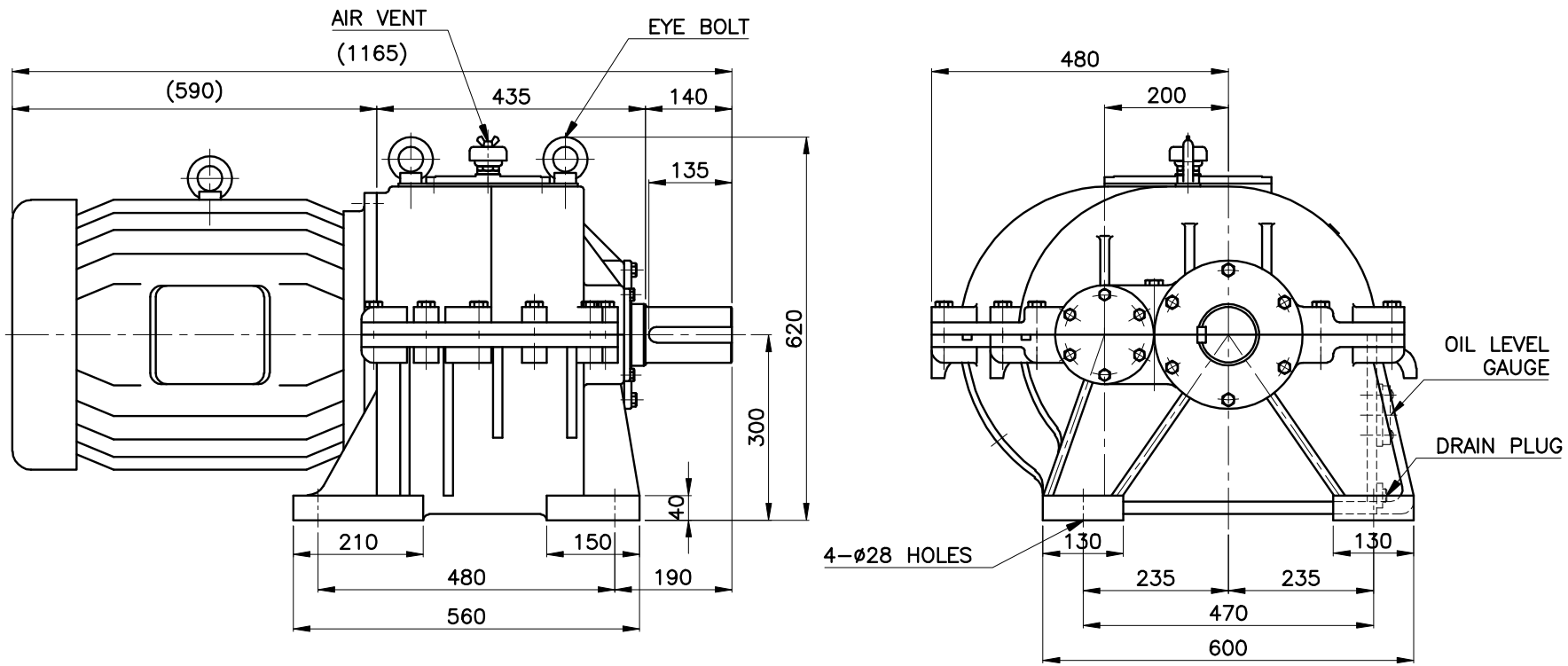


( ) 안의 치수는 다소 변경 될 수 있음.

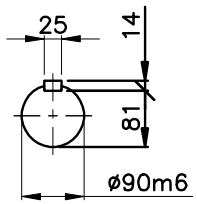


| | | | | | | | | | | | | |
|---|---|---|---|---|---|---|---|---|---|---|---|---|
| Ø90m6 | +0.035 +0.013 | TOLERANCES UNLESS OTHERWISE SPECIFIED | | ROUGHNESS | | – | EXTERNAL FORM | | – | – | | |
| | | | | | | NO. | DESCRIPITIONS | SIZE | MAT'L | Q'TY | WEIGHT (kg) | REMARKS |
| | | DIMENSION mm | TOL mm | SYMBOLS | Rmax 0.001 mm | CUSTO-MER | – | DRAWN | DESIGNED | CHECKED | | APPROVED |
| | | 1OVER4UNDER | ±0.1 | | | | | K.Y.M | | J.R.H | | |
| | | 4" 16" | ±0.2 | | | | | | | | | |
| | | 16" 63" | ±0.3 | ▽▽▽▽ | 0.8S | PART NAME | 30KW 4P 1/21~1/30 JK-BT 2200 REDUCER | DATE | 2010.07.22 | | | |
| | | 63" 125" | ±0.4 | | | | | | | | | |
| | | 125" 250" | ±0.5 | ▽▽▽ | 6.3S | | | DWG.NO. | 30K4P30-BT2200 | | | |
| | | 250" 500" | ±0.6 | | | | | | | | | |
| | | 500" 1000" | ±0.8 | ▽▽ | 12.5S | SCALE | 1 / 1 PROJEC-TION | REL.NO. | | | | |
| | | 1000" 2000" | ±1.0 | | | | | | | | | |
| | | 2000" 4000" | ±1.5 | ▽ | 50S | | JEIL ENGINEERING & INDUSTRIAL CO., LTD. | | | | | |
| | | ANGLE | ±0.5 | | | | | | | | | |