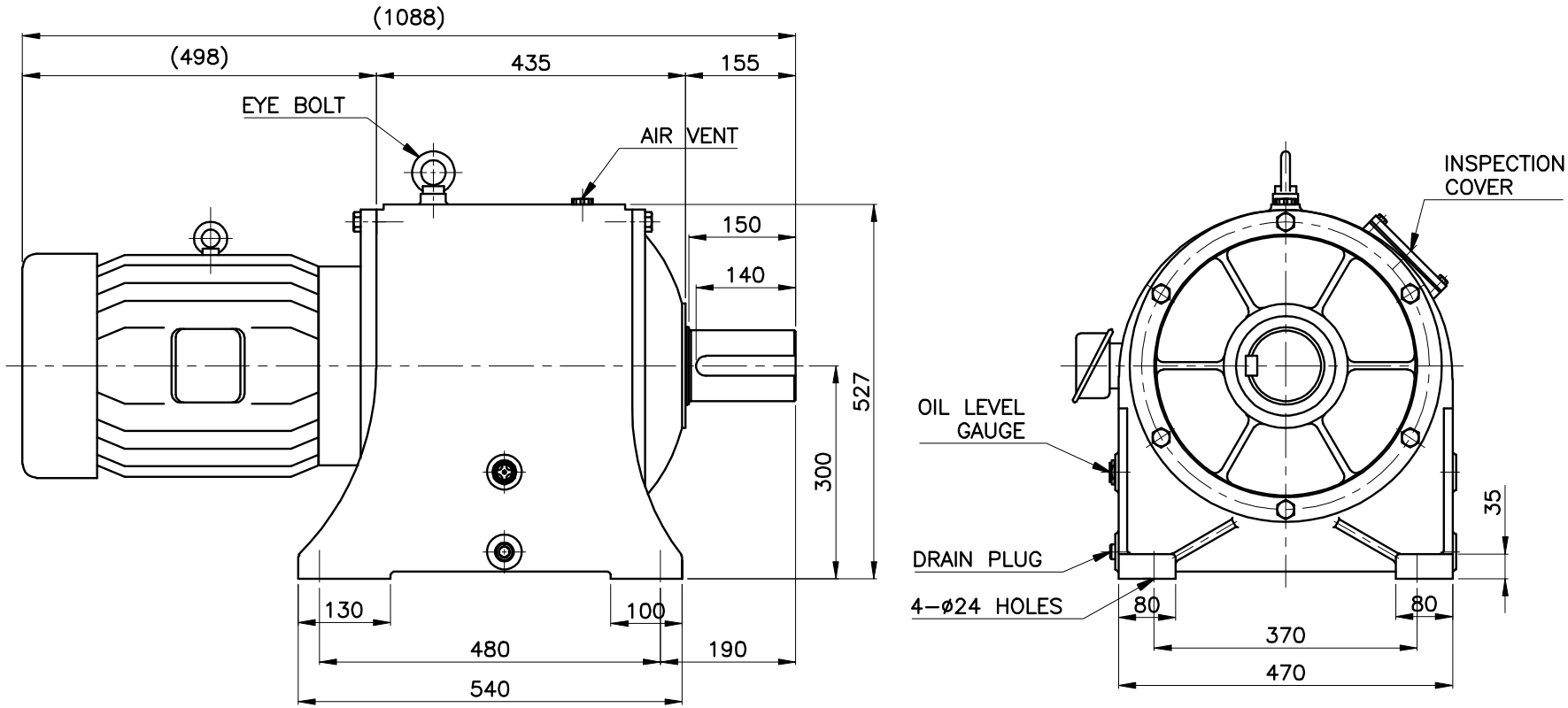

( ) 안의 치수는 다소 변경 될 수 있음.

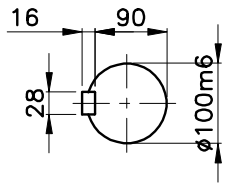

Ø100m6	+0.035 / +0.013	TOLERANCES UNLESS OTHERWISE SPECIFIED		ROUGHNESS		–	EXTERNAL FORM		–	–		
		DIMENSION mm	TOL mm	SYMBOLS	Rmax 0.001 mm	NO.	DESCRIPITIONS	SIZE	MAT'L	Q'TY	WEIGHT (kg)	REMARKS
		1OVER4UNDER	±0.1			CUSTO-MER	–	DRAWN	DESIGNED	CHECKED		APPROVED
		4" 16"	±0.2					K.Y.M		J.R.H		
		16" 63"	±0.3	▽▽▽	0.8S	PART NAME	15KW 4P 1/31~1/60 JK-HT 3150 REDUCER	DATE	2007.10.04			
		63" 125"	±0.4					DWG.NO.	20H4P60-H3150			
		125" 250"	±0.5	▽▽	6.3S							
		250" 500"	±0.6									
		500" 1000"	±0.8	▽	12.5S	SCALE	1 / 1 PROJEC-TION	REL.NO.				
		1000" 2000"	±1.0									
		2000" 4000"	±1.5	▽	50S		JEIL ENGINEERING & INDUSTRIAL CO., LTD.					
		ANGLE	±0.5									