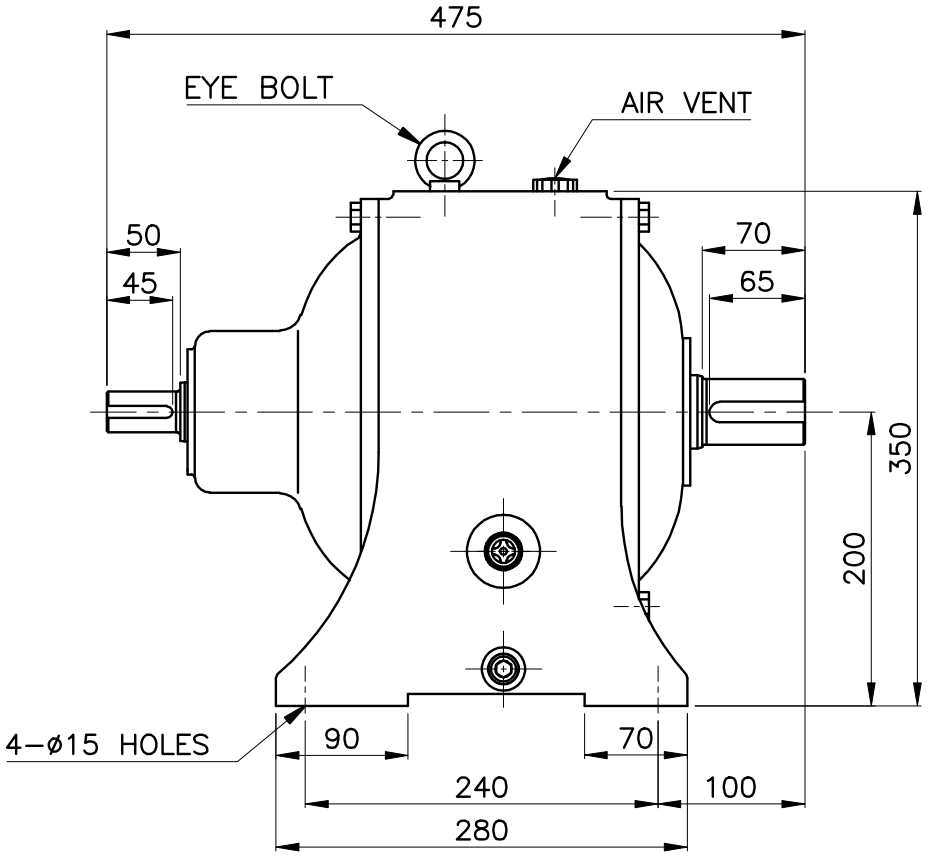

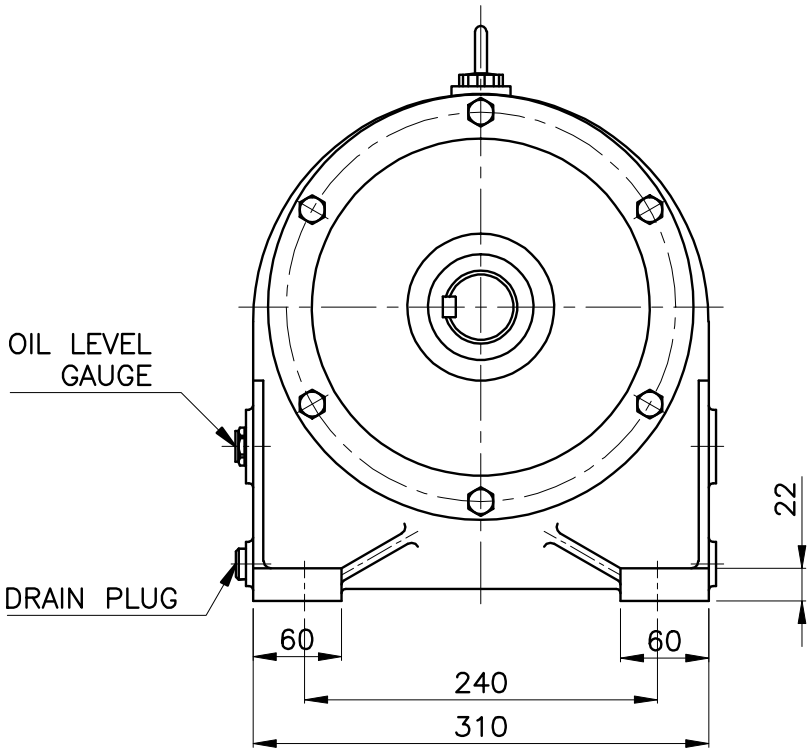

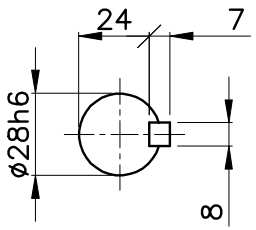

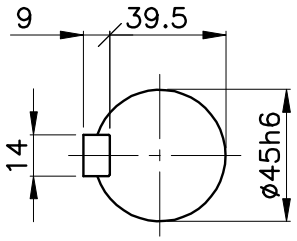

Ø28h6 0 −0.013	TOLERANCES UNLESS OTHERWISE SPECIFIED		ROUGHNESS		-	EXTERNAL FORM		-	-		
Ø45h6 0 −0.016	DIMENSION mm	TOL mm			NO.	DESCRIPITIONS	SIZE	MAT'L	Q'TY	WEIGHT (kg)	REMARKS
	1OVER4UNDER	±0.1	SYMBOLS	Rmax 0.001 mm	CUSTO-MER	–	DRAWN	DESIGNED	CHECKED		APPROVED
	4" 16"	±0.2					K.E.J		K.W.S		
	16" 63"	±0.3	▽▽▽▽	0.8S	PART NAME	2.2KW 4P 1/21~1/30					
	63" 125"	±0.4				JK-LT 2095 REDUCER	DATE	2007.10.11			
	125" 250"	±0.5	▽▽▽	6.3S			DWG.NO.	3H4P30-L2095			
	250" 500"	±0.6									
	500" 1000"	±0.8	▽▽	12.5S	SCALE	1 / 1 PROJEC-TION	REL.NO.				
	1000" 2000"	±1.0									
	2000" 4000"	±1.5	▽	50S		JEIL ENGINEERING & INDUSTRIAL CO., LTD.					
	ANGLE	±0.5									