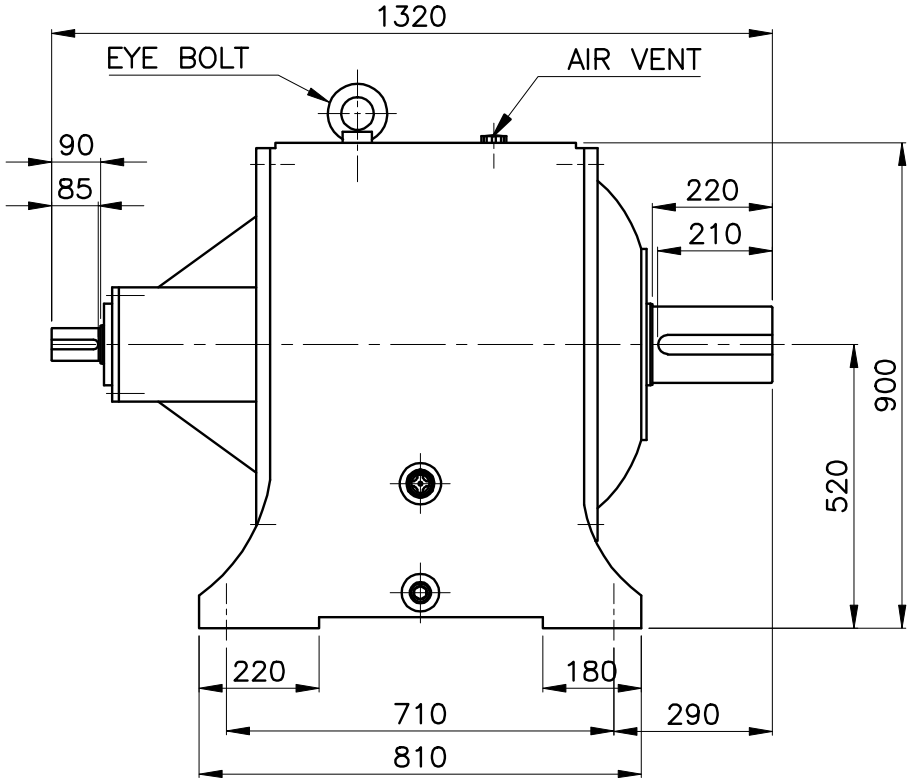

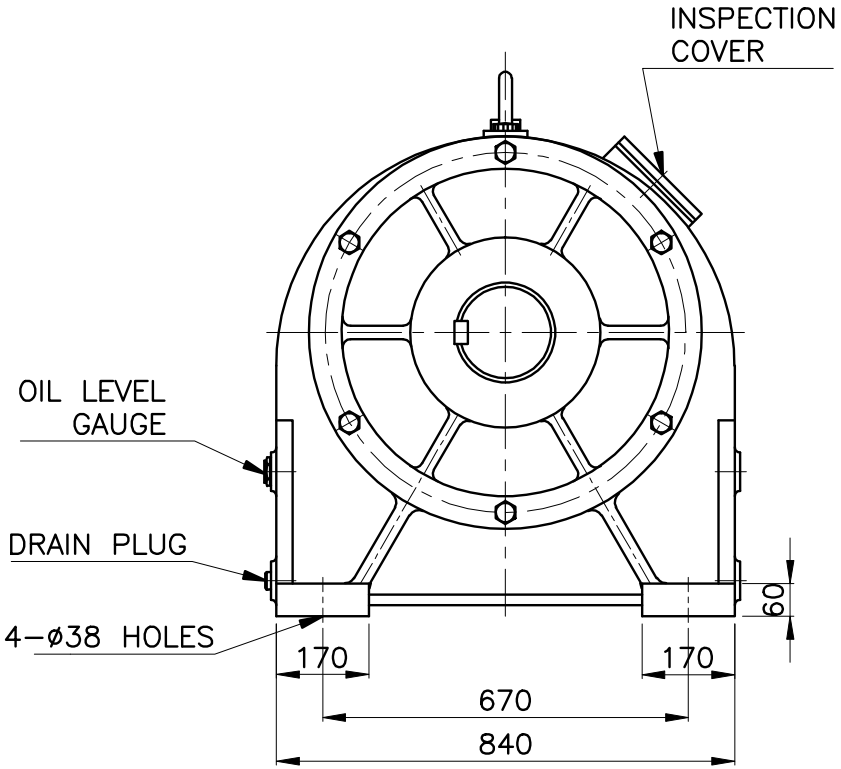

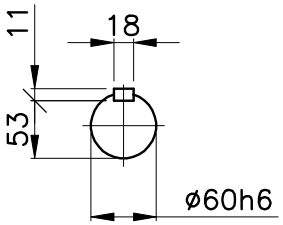

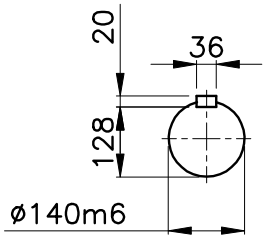

ø60h6	0 / −0.019	TOLERANCES UNLESS OTHERWISE SPECIFIED		ROUGHNESS		-	EXTERNAL FORM		-	-	
ø140m6	+0.040 / +0.015	DIMENSION mm	TOL mm	SYMBOLS	Rmax 0.001 mm	NO.	DESCRIPITIONS	SIZE	MAT'L	Q'TY	WEIGHT (kg) / REMARKS
		1OVER4UNDER	±0.1			CUSTO-MER	–	DRAWN	DESIGNED	CHECKED	APPROVED
		4" 16"	±0.2					K.Y.M		J.R.H	
		16" 63"	±0.3	▽▽▽▽	0.8S	PART NAME	45KW 4P 1/60 JK-LT 3260 REDUCER	DATE	2010.11.23		
		63" 125"	±0.4								
		125" 250"	±0.5	▽▽▽	6.3S			DWG.NO.	60H4P60-L3260		
		250" 500"	±0.6								
		500" 1000"	±0.8	▽▽	12.5S	SCALE	1 / 1 PROJEC-TION	REL.NO.			
		1000" 2000"	±1.0								
		2000" 4000"	±1.5	▽	50S		JEIL ENGINEERING & INDUSTRIAL CO., LTD.				
		ANGLE	±0.5								