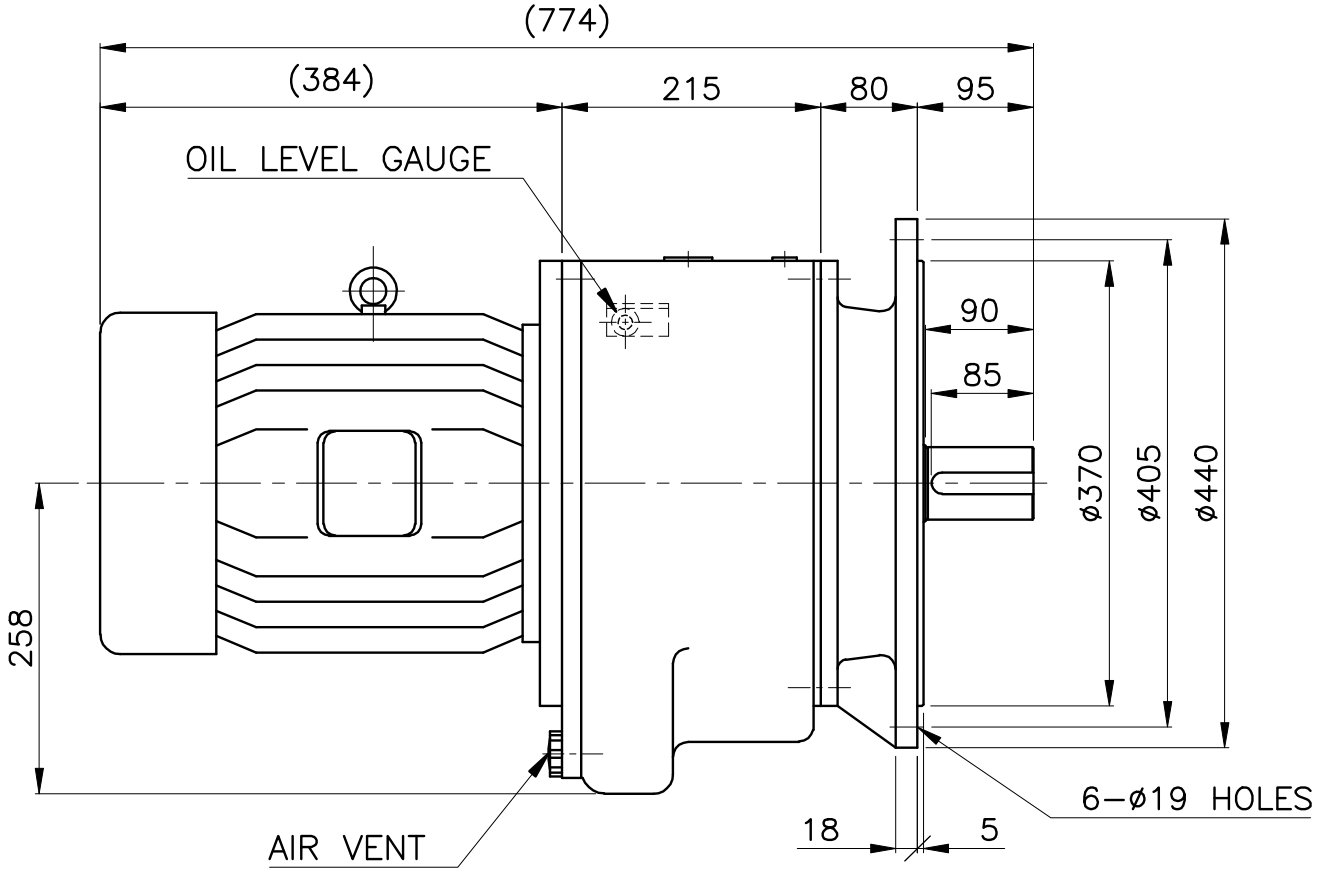

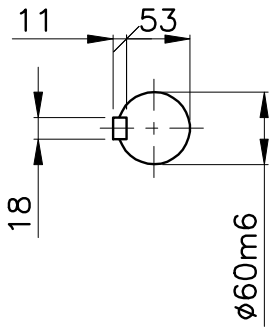

( ) 안의 치수는 다소 변경 될 수 있음.

Ø60m6	+0.030 / +0.011	TOLERANCES UNLESS OTHERWISE SPECIFIED		ROUGHNESS		-	EXTERNAL FORM		-	-	
						NO.	DESCRIPITIONS	SIZE	MAT'L	Q'TY	WEIGHT (kg) / REMARKS
		DIMENSION mm	TOL mm	SYMBOLS	Rmax 0.001 mm	CUSTO-MER	–	DRAWN	DESIGNED	CHECKED	APPROVED
		1OVER4UNDER	±0.1					K.E.J		K.W.S	
		4" 16"	±0.2			PART NAME	7.5 KW 4P 1/21~1/30 JK-VT 2125 REDUCER				
		16" 63"	±0.3	▽▽▽▽	0.8S			DATE	2007.09.20		
		63" 125"	±0.4					DWG.NO.	10H4P30-V2125		
		125" 250"	±0.5	▽▽▽	6.3S						
		250" 500"	±0.6								
		500" 1000"	±0.8	▽▽	12.5S	SCALE	1 / 1 PROJEC-TION	REL.NO.			
		1000" 2000"	±1.0								
		2000" 4000"	±1.5	▽	50S		JEIL ENGINEERING & INDUSTRIAL CO., LTD.				
		ANGLE	±0.5								