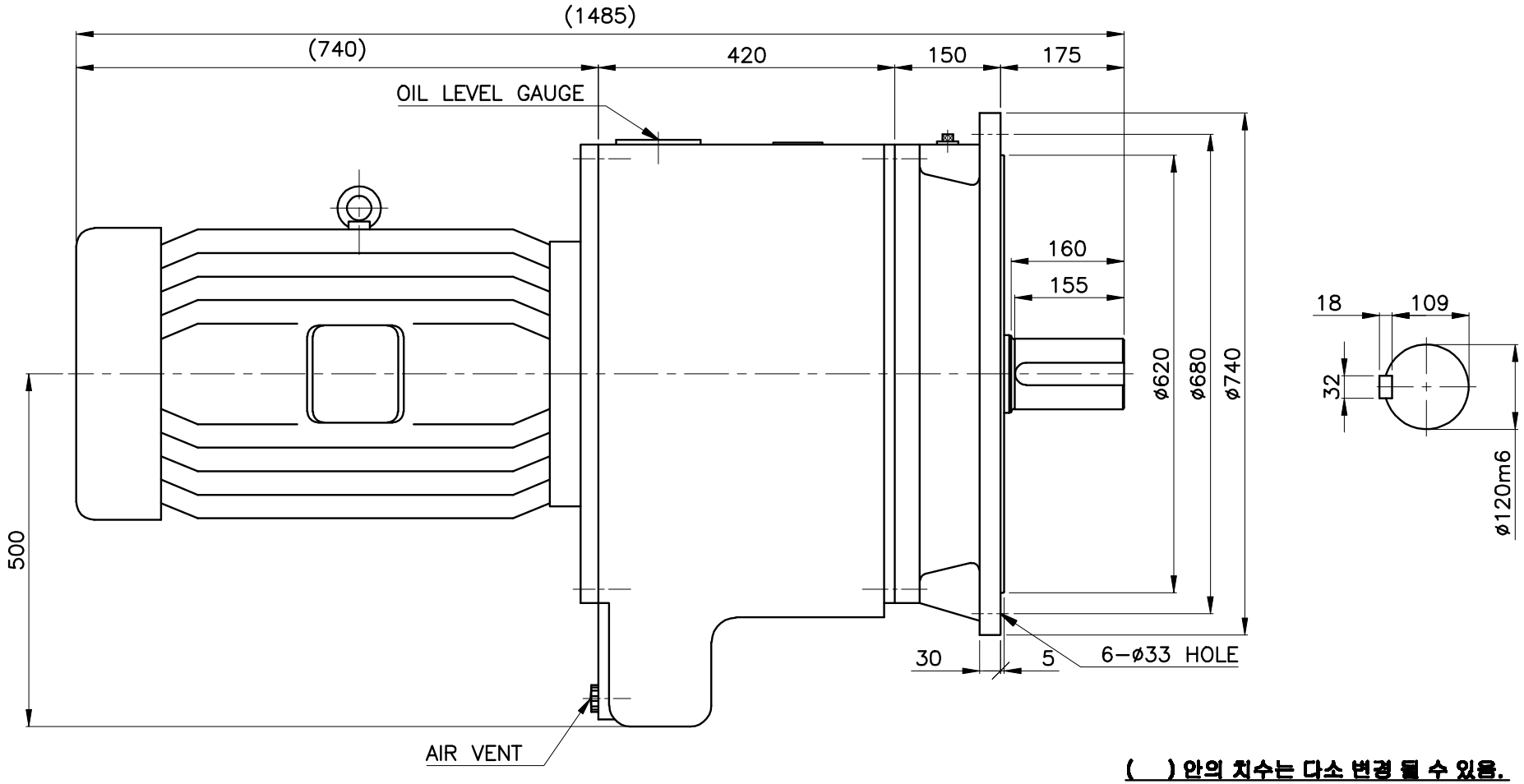

( ) 안의 치수는 다소 변경 될 수 있음.

Ø120m6	+0.035 / +0.013	TOLERANCES UNLESS OTHERWISE SPECIFIED		ROUGHNESS		-	EXTERNAL FORM		-	-		
						NO.	DESCRIPITIONS	SIZE	MAT'L	Q'TY	WEIGHT (kg)	REMARKS
		DIMENSION mm	TOL mm	SYMBOLS	Rmax 0.001 mm	CUSTO-MER	-	DRAWN	DESIGNED	CHECKED	APPROVED	
		1OVER4UNDER	±0.1					K.Y.M		J.R.H		
		4" 16"	±0.2									
		16" 63"	±0.3	▽▽▽▽	0.8S	PART NAME	30KW 6P 1/21~1/30	DATE	2011.01.05			
		63" 125"	±0.4									
		125" 250"	±0.5	▽▽▽	6.3S		JK-VT 2250 REDUCER	DWG.NO.	40H6P30-V2250			
		250" 500"	±0.6									
		500" 1000"	±0.8	▽▽	12.5S	SCALE	1 / 1 PROJEC-TION	REL.NO.				
		1000" 2000"	±1.0									
		2000" 4000"	±1.5	▽	50S		JEIL ENGINEERING & INDUSTRIAL CO., LTD.					
		ANGLE	±0.5									